REV	DATE	BY	DESCRIPTION
B	7-10-2015	DD	BENDED SHELL (E0019842) CHANGED FOR ROLLED SHELL
C	27-9-2016	DD	DIMENSIONS AND TEXT ADDED, PRODUCT KEY CHANGED
D	14-2-2018	TT	CHANGED DRUM ASSY

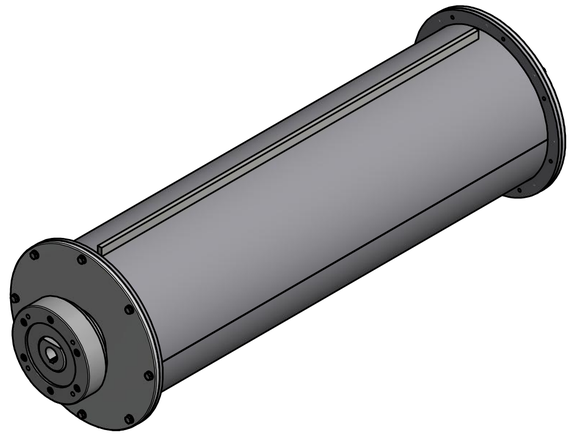

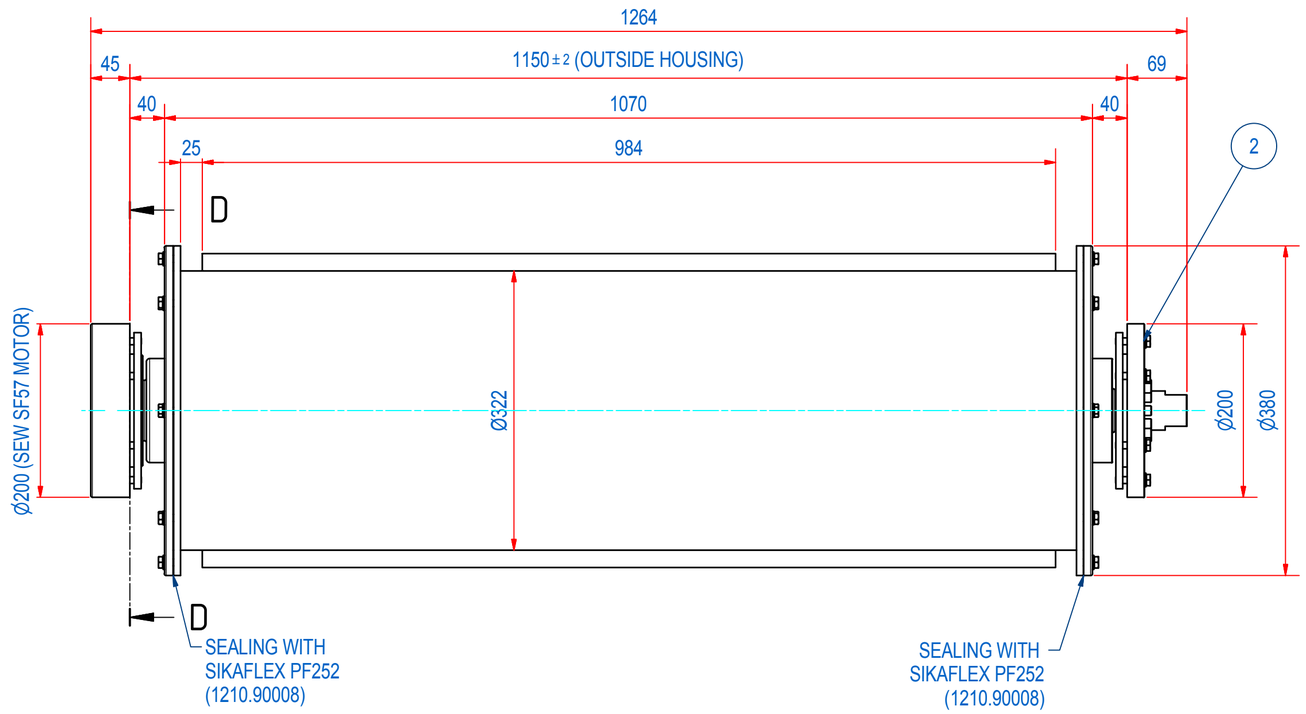

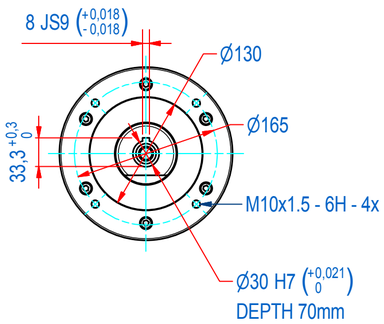

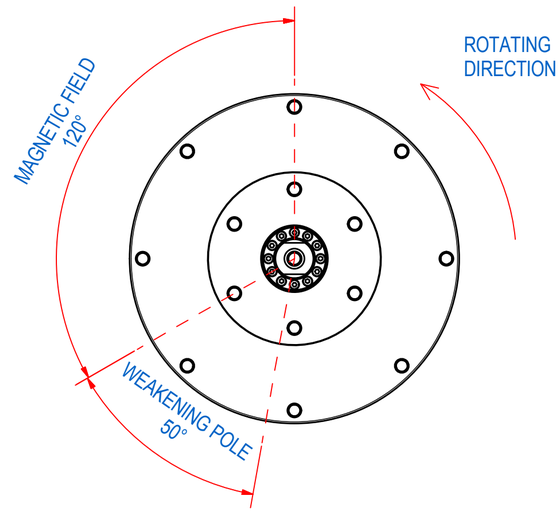

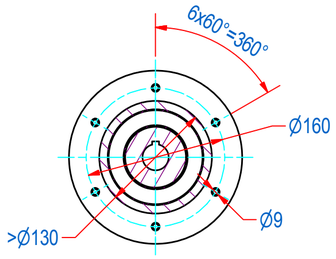

D-D
MOUNTING DETAIL (2x)
HOLE PATTERN COUNTER PART

ITEM	QTY	PART NUMBER	DESCRIPTION	Dimensions
4	1	E0017824	DR-10 AXLE ST	
3	1	E0041311	SHELL WITH CLEATS	
2	1	E0011058	DR-00 FLANGE ASSY ALU	
1	1	E0019879	DR-10-B DRUM ASSY	

RAW MAT.	QTY	MAT. NUMBER	MAT. DESCRIPTION	LENGTH (mm)	WIDTH (mm)
	1				

	Sheet: A2	Extra info:	General tolerance: ISO 2768- mK
Drawn: TD	Weight (kg): 187,5		Drawn according: ISO268; ISO1101; ISO2553
Date: 12-11-2014	GOUDSMIT MAGNETIC SYSTEMS		Status: Released
Spare part: False			Customer reference number:
Quick search: RMD-10			Document number: E0024388 / Doc.Rev: D
Description: RMD-10-32-RN-B-OR-30S2			Part number: E0024388 / Rev: D

® All rights reserved. Reproduction is not permitted without written permission of GOUDSMIT Magnetic Systems BV