REV	DATE	BY	DESCRIPTION
-	10-12-2014	TD	Reference drawing = E0024388
A	23-9-2015	TD	
B	19-9-2016	DD	SHELL CHANGED, PRODUCT KEY CHANGED

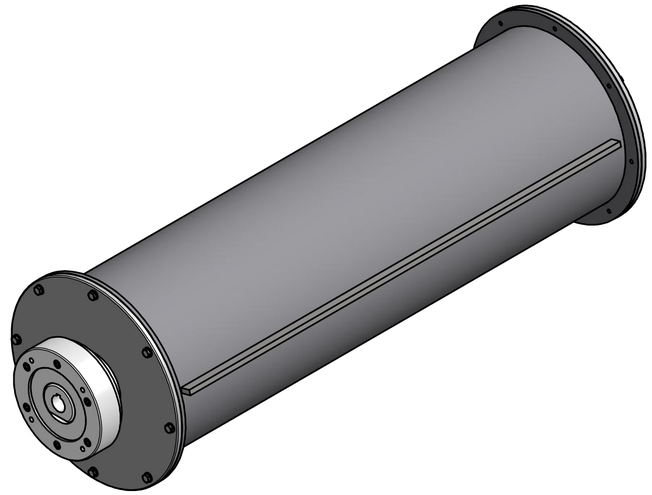

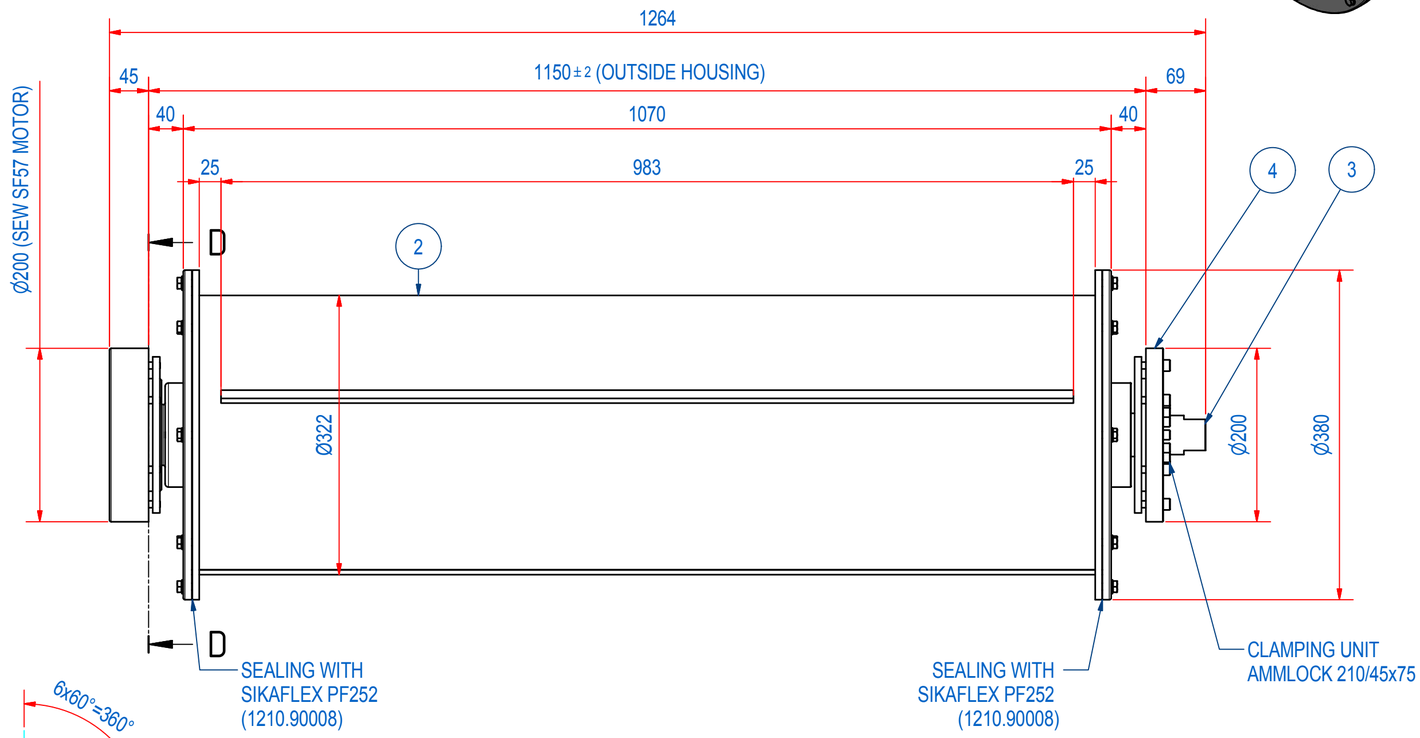

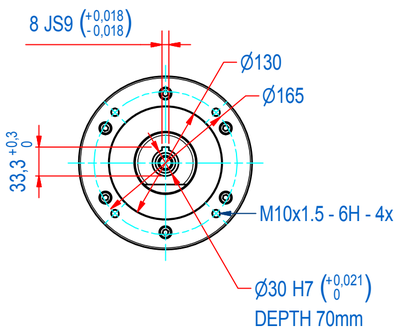

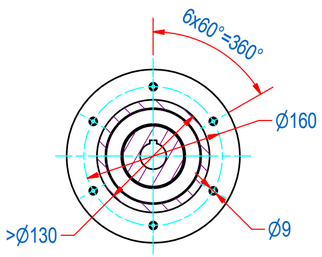

D-D
MOUNTING DETAIL (2x)
HOLE PATTERN COUNTER PART

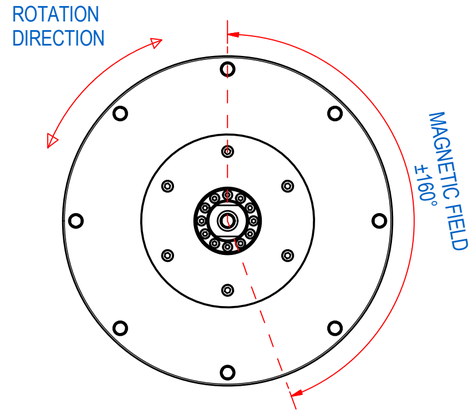

ITEM	QTY	PART NUMBER	DESCRIPTION	Dimensions
4	1	E0011058	DR-00 FLANGE ASSY ALU	
3	1	E0017824	DR-10 AXLE ST	
2	1	E0060297	SHELL WITH CLEATS RECD 10	
1	1	E0025980	DR-10-F DRUM ASSY	

RAW MAT.	QTY	MAT. NUMBER	MAT. DESCRIPTION	LENGTH (mm)	WIDTH (mm)
	1				

Sheet: A2	Extra info:		General tolerance: ISO 2768- mK
Drawn: TD	Weight (kg): 154,3		Drawn according: ISO268; ISO1101; ISO2553
Date: 10-12-2014	GOUDSMIT MAGNETIC SYSTEMS		Status: Released
Spare part: False			Customer reference number:
Quick search: RMD-10			Document number: E0026051 / Doc.Rev: B
Description: RMD-10-32-RN-F-OR-30S2			Part number: E0026050 / Rev: B

® All rights reserved. Reproduction is not permitted without written permission of GOUDSMIT Magnetic Systems BV