DOC.NR.	REV	DATE	BY	DESCRIPTION
E0139715	-	26-1-2021	TT	ORIGINAL DRAWING

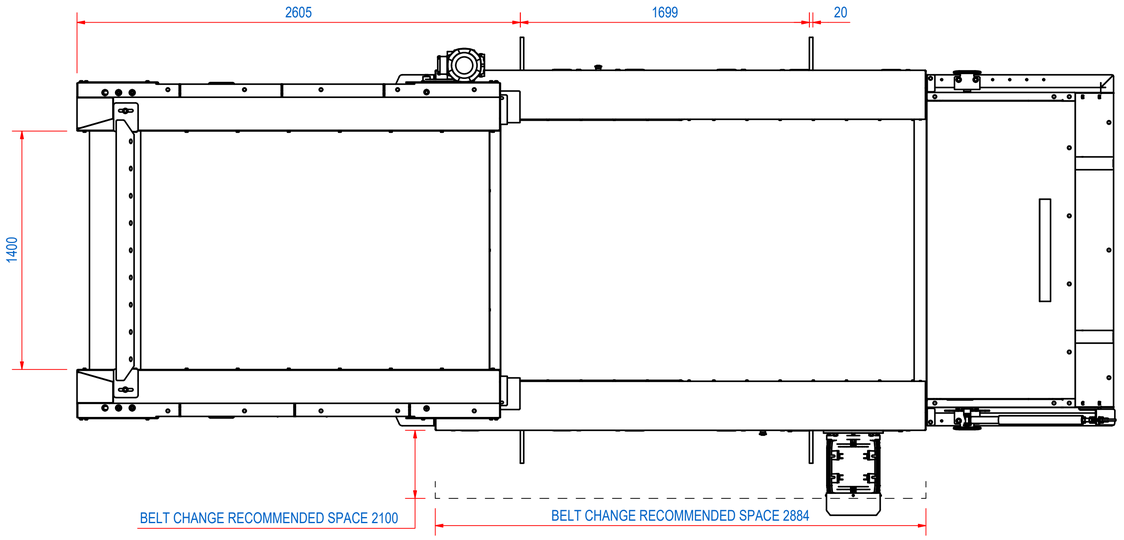

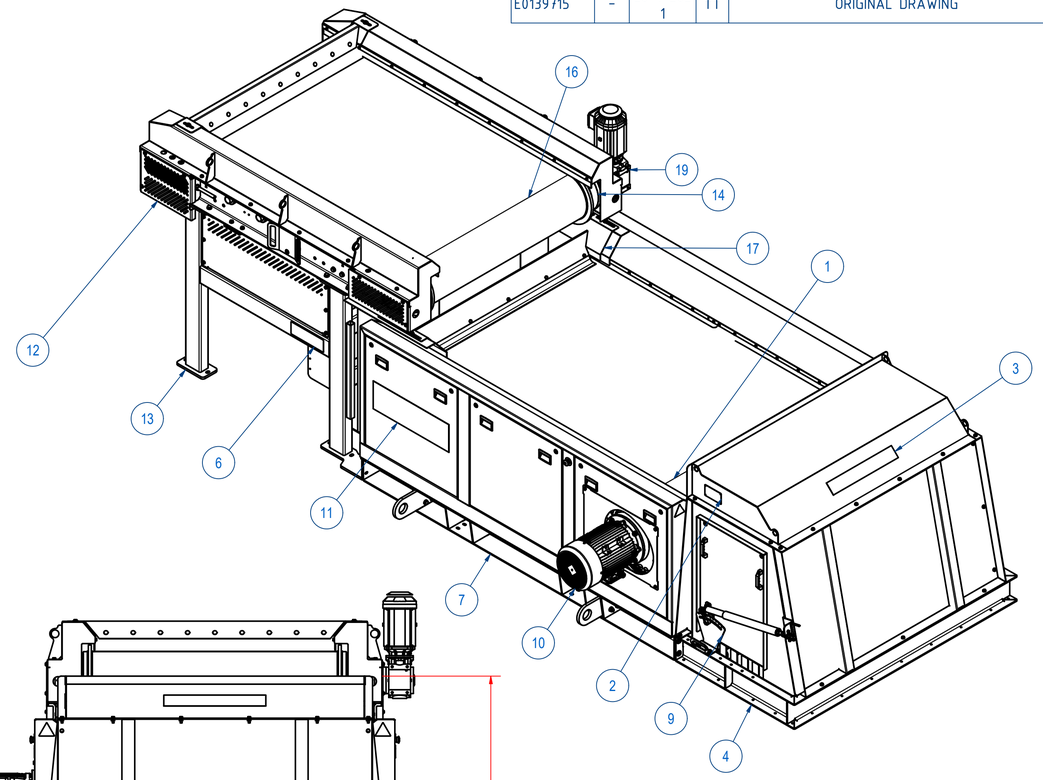

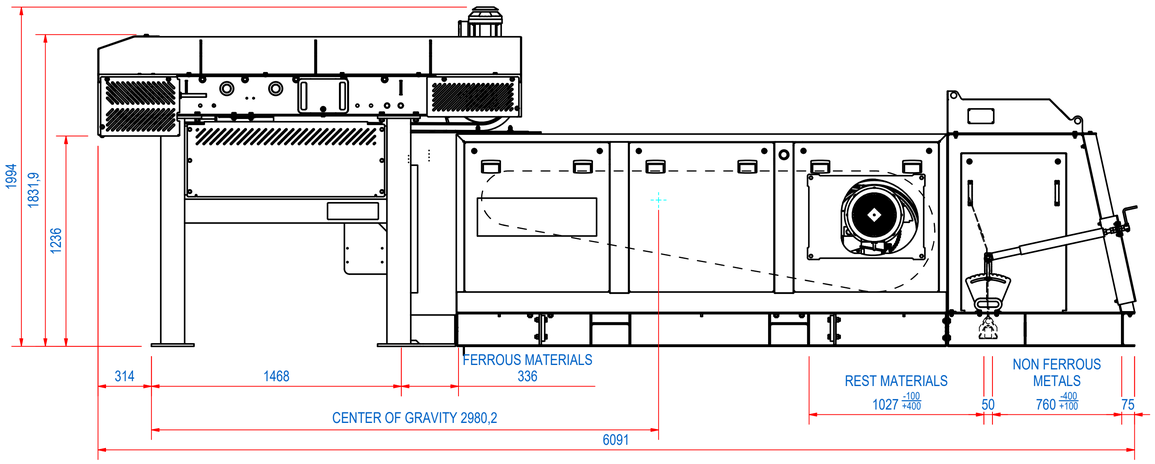

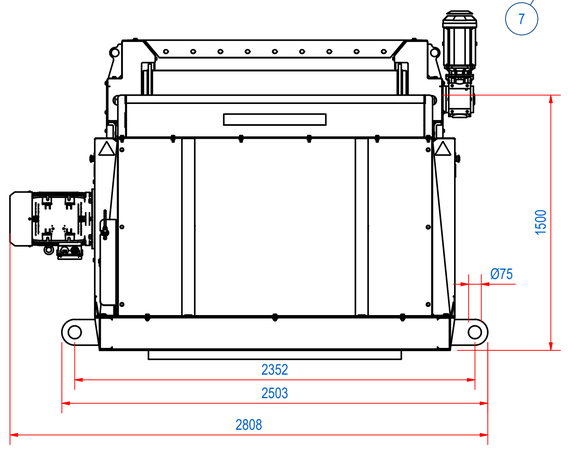

RECOMMENDED FREE SPACE AROUND
THE MACHINE FOR INSPECTION IS 800 MM

LAYOUT MOUNTING HOLES

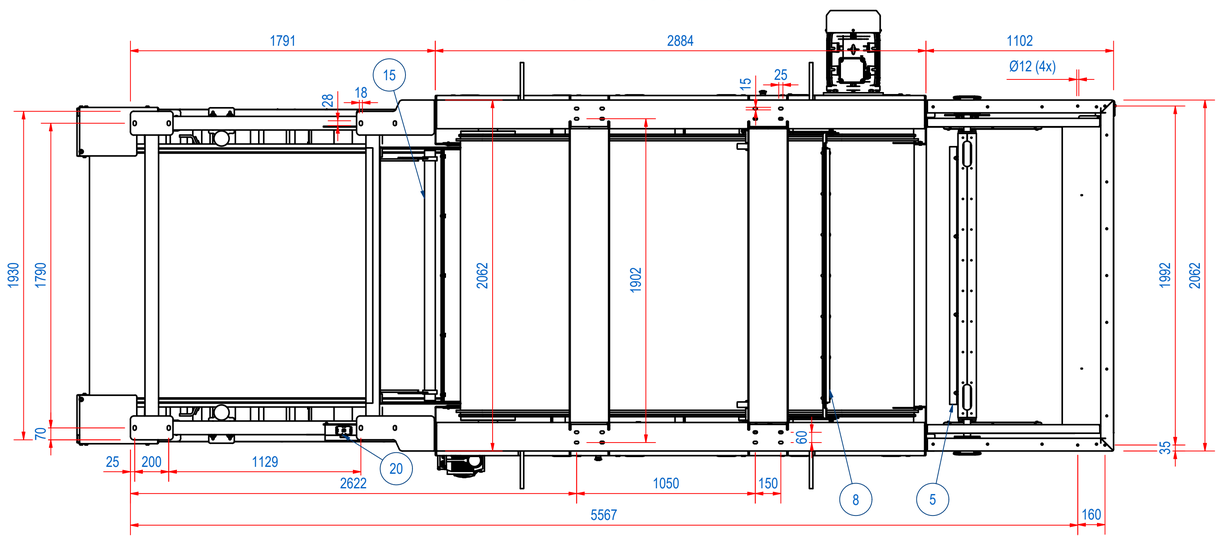

LAYOUT MOUNTING HOLES FUNNEL

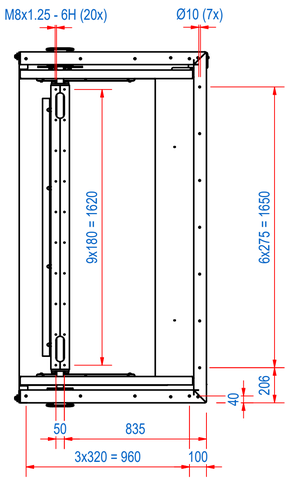

ELECTRICAL PROPERTIES
CURRENT: 40 A
POWER: 24,5 kVA

ITEM	QTY	PART NUMBER	DESCRIPTION	Dimensions
20	1	E0134215	RECV-CS-C-N	
19	1	E0107761	RECC-MM-300-F84-R	
18	1	E0109220	RECE-CS-C	
17	1	E0137446	RECC-SP-15-SS	
16	1	E0067603	RECC-CB-15-NBR-65	
15	1	E0107890	RECC-BS-15-ST	
14	1	E0109790	RHP-F324A6-167-RSD-BA	
13	1	E0109998	RECC-CF-15-C20-S	
12	1	E0107873	RECC-CU-15-C20-R	
11	2	E0120506	STICKER EDDYFINES W700 H222 WHITE	
10	1	A280329	RECM-15-E38HI	
9	1	E0108037	RECE-SA-S-R	
8	1	E0111559	RECE-BS-15-F-NBR	
7	1	E0107864	RECE-EF-15-F-R	
6	2	E0129382	STICKER ECS HOISTING	
5	1	E0108097	RECE-SP-15-FM	
4	1	E0075432	RECE-SB-15-M-ST	
3	2	E0120519	STICKER GOUDSMIT MAG. W600 WHITE	
2	1	E0098479	DATA PLATE	
1	1	45.1800085	RECE-CB-15-F-PU-24	

RAW MAT.	Quantity	Material Number	Material Description	Length (mm)	Width (mm)
	1				

Sheet: A1	Extra info: WEBSITE MODEL		General tolerance: ISO 2768- mK
Drawn: TT	Weight (kg): 4975		Drawn according: ISO268; ISO1101; ISO2553
Date: 26-1-2021		GOUDSMIT MAGNETICS	Status: Released
Spare part: False	Source: MC-C		Customer reference number:
Quick search: REC-15		® All rights reserved. Reproduction is not permitted without written permission of GOUDSMIT Magnetic Systems BV.	Document number: E0139715 Doc.Rev:
Description: REC-15-E38HI-F-C20-FMS-PU-R			Part number: E0139716 Rev: -