DOC.NR.	REV	DATE	BY	DESCRIPTION
E0163809	-	22-2-2024	TK	ORIGINAL DRAWING

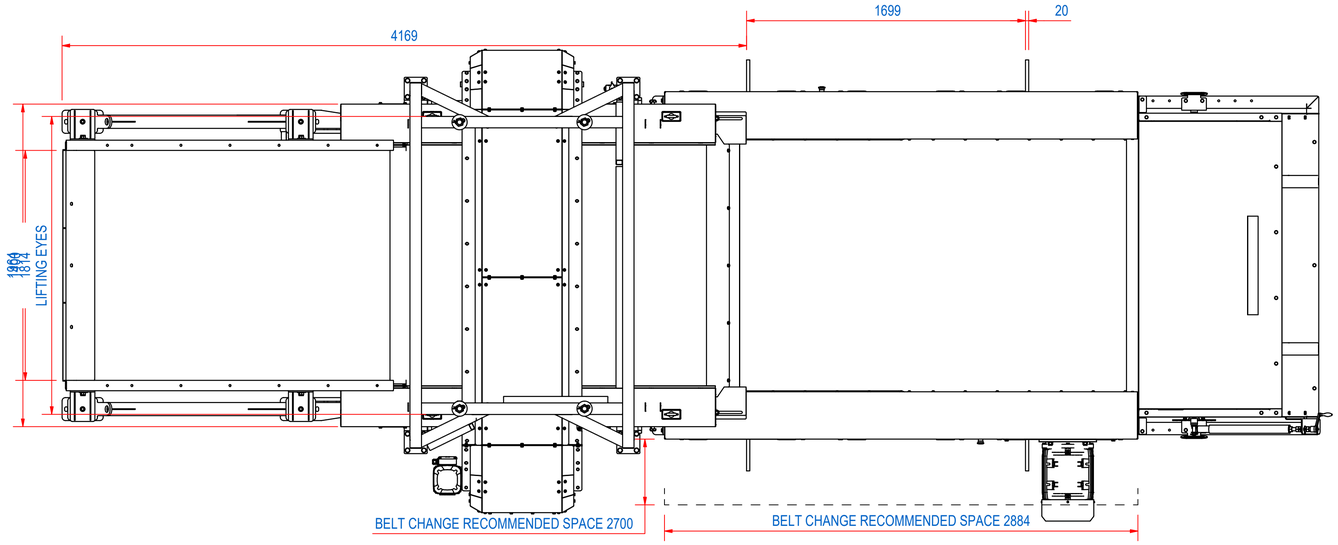

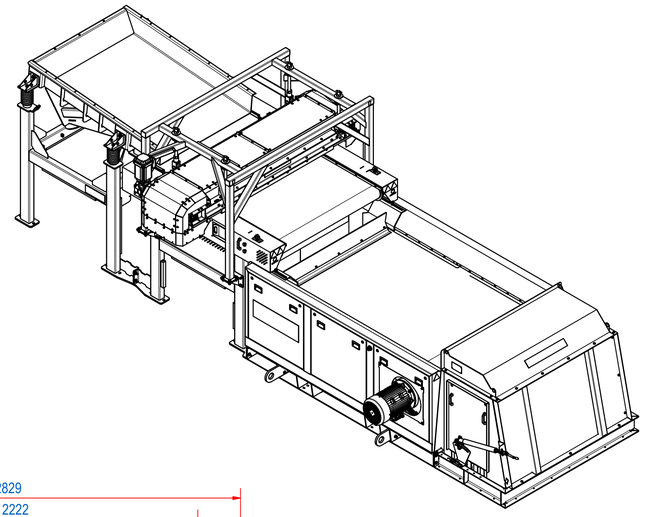

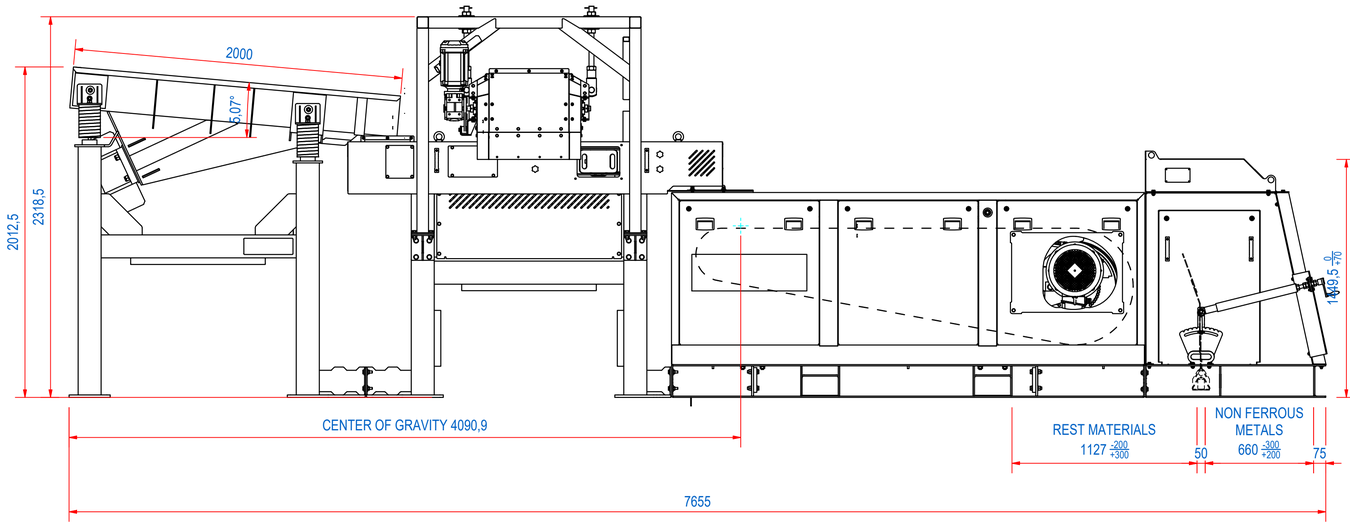

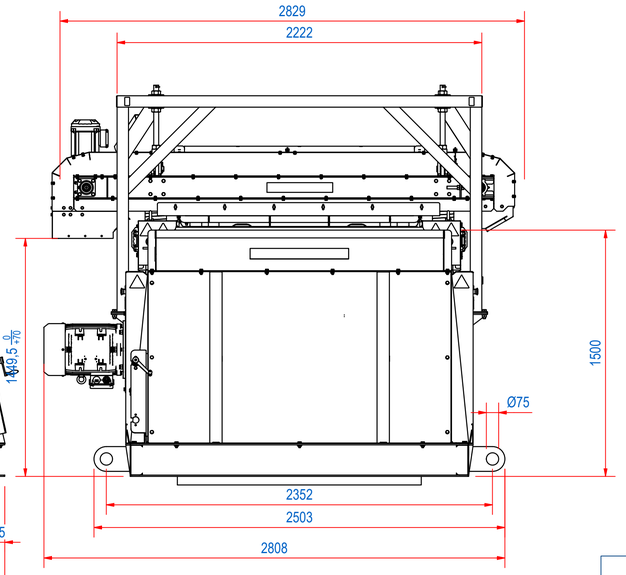

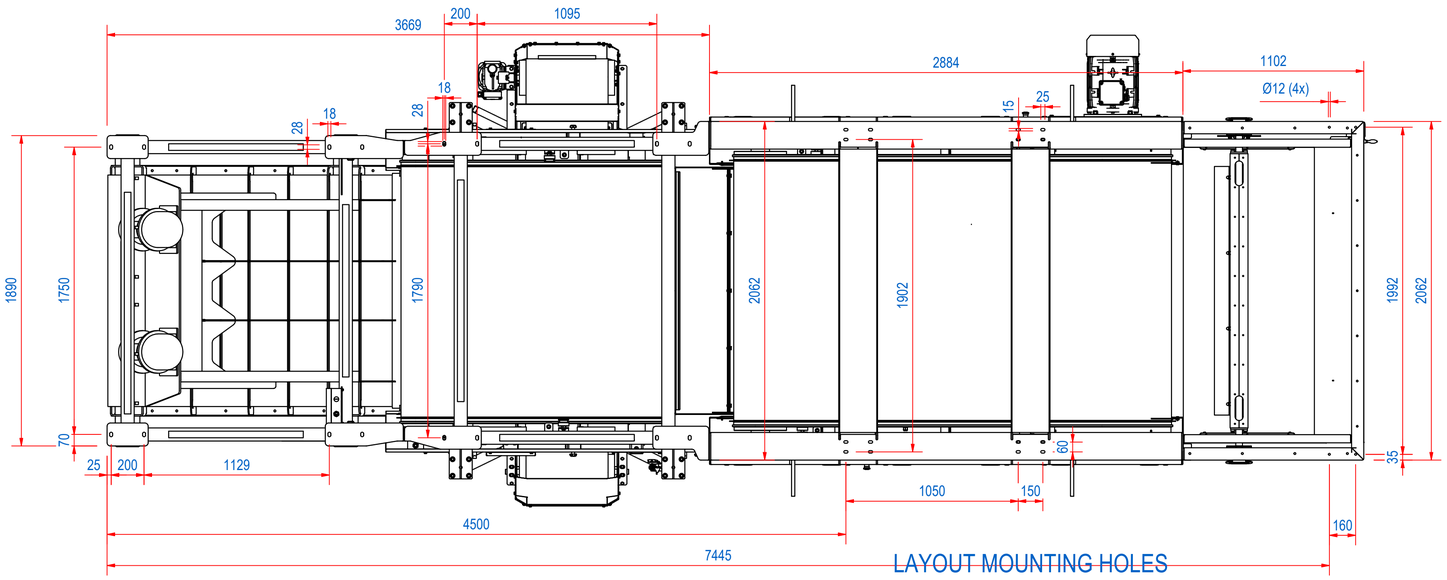

LAYOUT MOUNTING HOLES

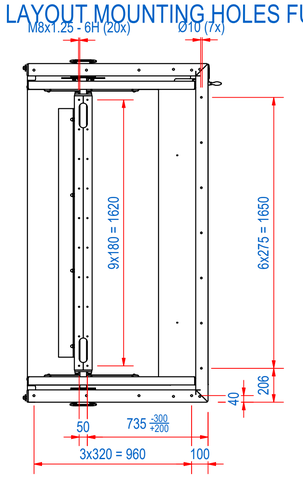

LAYOUT MOUNTING HOLES FUNNEL

ELECTRICAL PROPERTIES
CURRENT: 35 A
POWER: 22,9 kVA

Transportation Specification

Main Module	Length	Width	Height	Mass
ECS Module	2884 mm	1965 mm	1248 mm	2189 kg
Bovenband Module	2009 mm	730 mm	553 mm	820 kg
HG Feeder Module	3280 mm	1965 mm	1248 mm	932 kg
ConveyorFeeder Module	1644 mm	705 mm	1926 mm	583 kg
Separation Box	1102 mm	1407 mm	1500 mm	322 kg

RECOMMENDED FREE SPACE AROUND THE MACHINE FOR INSPECTION IS 800 MM

ITEM	QTY	PART NUMBER	DESCRIPTION	Dimensions
17	2	E0129382	STICKER ECS HOISTING	
14	2	E0120519	STICKER GOUDSMIT MAG. W600 WHITE	
13	2	E0120506	STICKER EDDYFINES W700 H222 WHITE	
12	1	E0134050	REC-VE-G-N	
11	1	E0106804	REC-VB-15-VM20-05-N	
10	1	E0161919	REC-VF-08-MD	
9	1	E0109220	REC-EE-C	
8	1	E0075432	REC-SB-15-M-ST	
7	1	E0108037	REC-SA-S-R	
6	1	A280329	REC-MR-15-E38HI	
5	1	E0146627	REC-SP-15-FT	
4	1	E0107864	REC-EF-15-F-R	
16	1	E0098479	DATA PLATE	
3	1	E0160500	BOVENBAND MODULE 15	
2	1	E0148391	WELDING FRAME	
1	1	45.1800085	REC-EB-15-F-PU-24	
RAW MAT.	1			
	Quantity	Material Number	Material Description	Length (mm) / Width (mm)

Sheet: A1	Extra info:	General tolerance:	ISO 2768- mK
Drawn: TK	Weight (kg): 6675	Drawn according:	ISO286; ISO1101; ISO2553
Date: 6-2-2024	GOUDSMIT MAGNETICS	Status:	Released
Spare part: False	Source:	Customer reference number:	
Quick search: REC-15		Document number: E0161425	Doc.Rev: -
Description: REC-15-38HI-O-VB-FTS-PU-N-R		Part number: E0163809	Rev: -

© All rights reserved. Reproduction is not permitted without written permission of GOUDSMIT Magnetic Systems BV