REV	DATE	BY	DESCRIPTION
-	13-2-2019	GS	ORIGINAL DRAWING; REF. E0071389
A	19-1-2023	TT	CONNECTION BOX REPLACED
B	15-3-2023	DK	STICKER 1000.20002 REPLACED BY E0125602

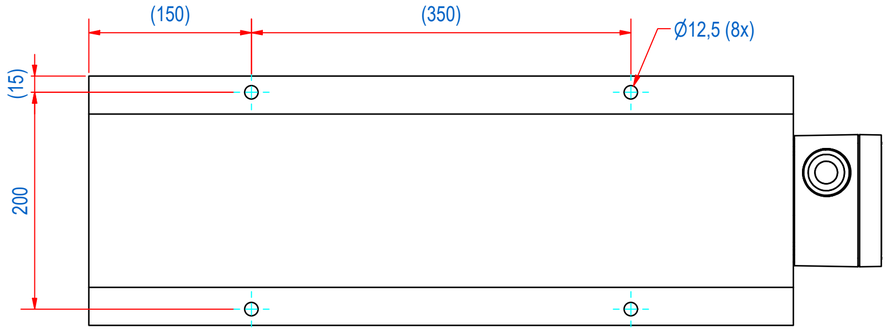

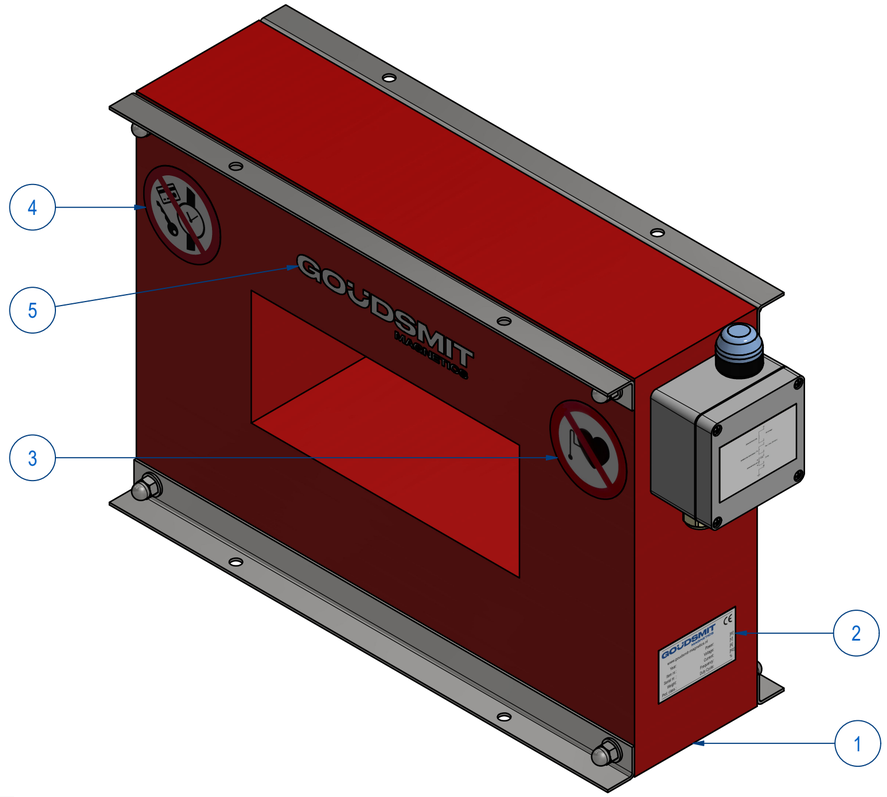

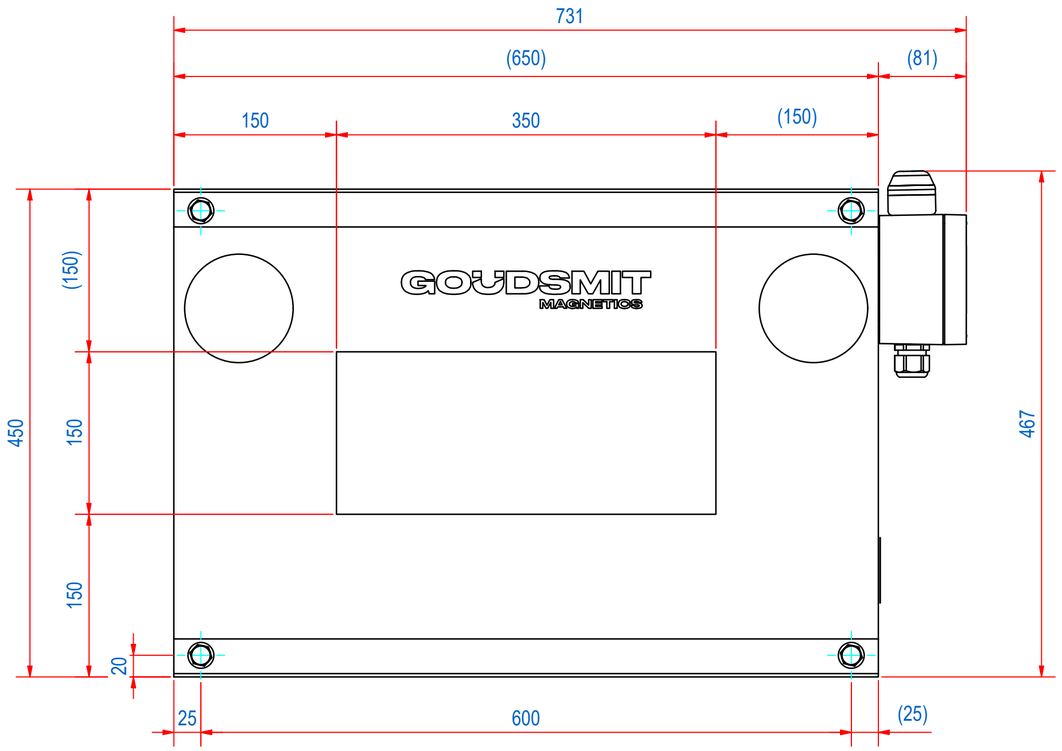

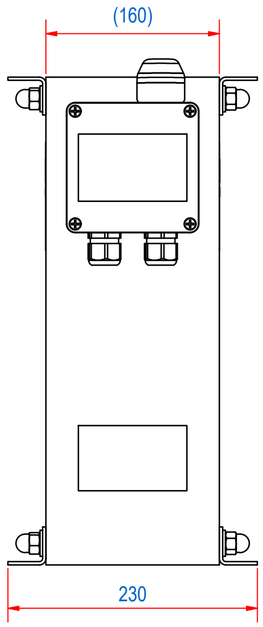

ITEM	QTY	PART NUMBER	DESCRIPTION	Dimensions	
5	2	E0125602	STICKER GOUDSMIT W230 H35		
4	2	1000.20048	STICKER ARTICLES FORBID D100		
3	2	1000.20043	STICKER PACEMAKER FORB. D=100		
2	1	P190179	HDTU-STICKER DEMAG. TUNNEL		
1	1	E0110493	HDTU-DEMAG. ASSEMBLY EDTR351502		
RAW MAT.	1				
	Quantity	Material Number	Material Description	Length (mm)	Width (mm)

Sheet: A2	Extra info: DEMAG TUNNEL 2932VA DUTY CYCLE: 100%		General tolerance: ISO 2768- mK
Drawn: GS	Weight (kg): 110		Drawn according: ISO268; ISO1101; ISO2553
Date: 13-2-2019		GOUDSMIT MAGNETICS	Status: Standard
Spare part: False	Source: MC-C		Customer reference number:
Quick search: EDTR3515		® All rights reserved. Reproduction is not permitted without written permission of GOUDSMIT Magnetic Systems BV	Document number: EDTR351502 Doc.Rev: B
Description: HDTU-H-R-0350x0150-230V-B			Part number: EDTR351502 Rev: B