REV	BY	DATE	DESCRIPTION
A	JDL	28.02.2013	ORIGINAL DRAWING
B	PH	11.11.2016	NEW STANDARD LENGTH (850mm)

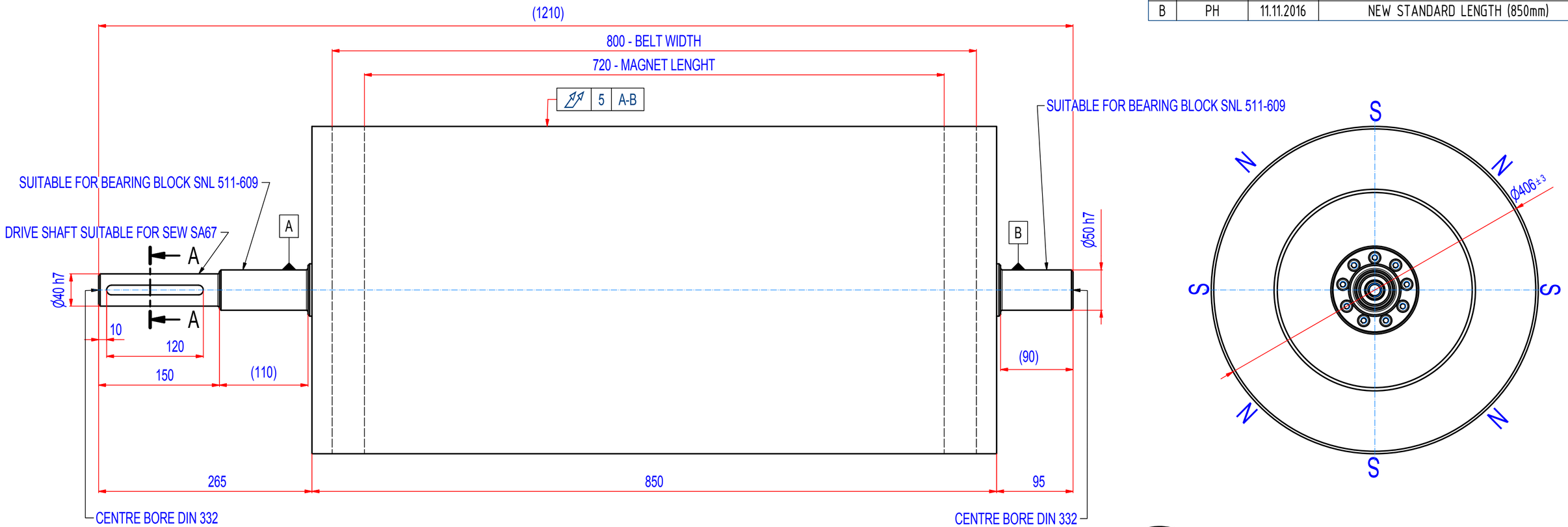

A-A (1 : 1)

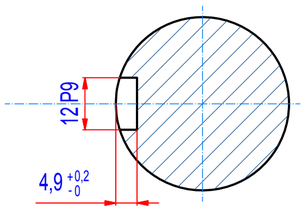

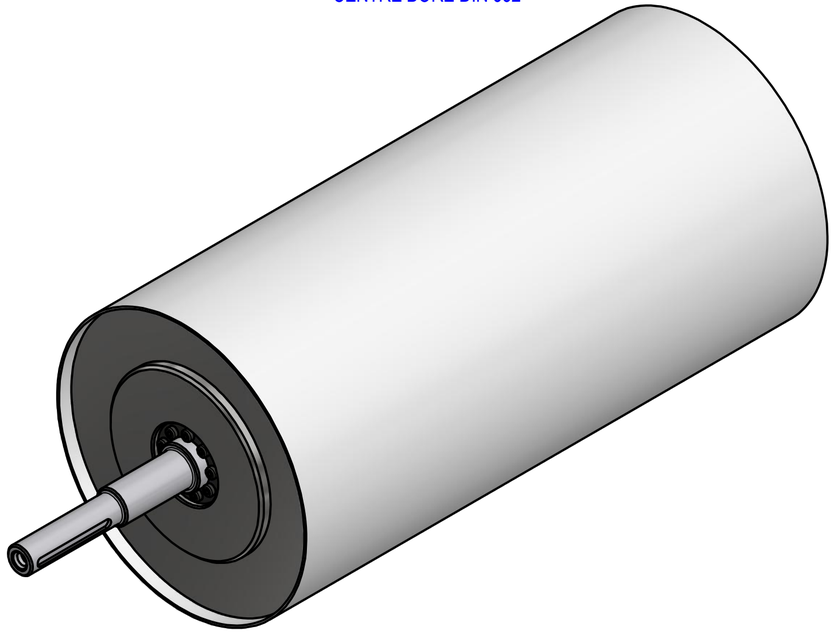

SPECIFICATIONS

SUITABLE FOR BELT WIDTH: 800 mm
MAGNET TYPE: NdFeB
NUMBER OF POLES: 8
SHAFT TYPE: REMOVABLE, EQUIPPED WITH CLAMP BUSHINGS
OVERALL WEIGHT: 336 kg
CROWNING: NO
RUBBER LAYER: NO

IF NOT SPECIFIED ON DRAWING, LINEAR DIMENSION TOLERANCES PER ISO 2768-1 CLASS C , GEOMETRICAL TOLERANCES PER ISO 2768-1 CLASS L

POZ./POS.	Č. SOUČÁSTI/ PART NUMBER	POPIS / DESCRIPTION	HMOT./ WEIGHT
1	A434_000000	Válec RHAN40080000	336,3

Sheet: A2	Extra info:		General tolerance: ISO 2768 - cL
Drawn: EN	Weight (kg): 336,3		Drawn according: ISO268; ISO1101; ISO2553
Date: 12.04.2018	GOUDSMIT MAGNETIC SYSTEMS		Status:
Predecessor:			Customer reference number:
Quick search: XRHR	® All rights reserved. Reproduction is not permitted without written permission of GOUDSMIT Magnetic Systems BV		Product key: RHP-B406A08-080-RSD-BA
Description: Magnetic headroller, NdFeB, D406 - W850			Part number: RHAN40080000 Rev: B