REV	BY	DATE	DESCRIPTION
	EN	11.05.2017	NEW VAULT, OLD REF. ROFC100340_D
A	LF	28.06.2022	BELT CLEATS 50mm (WAS 100), MOTOR IP55 (WAS IP54)

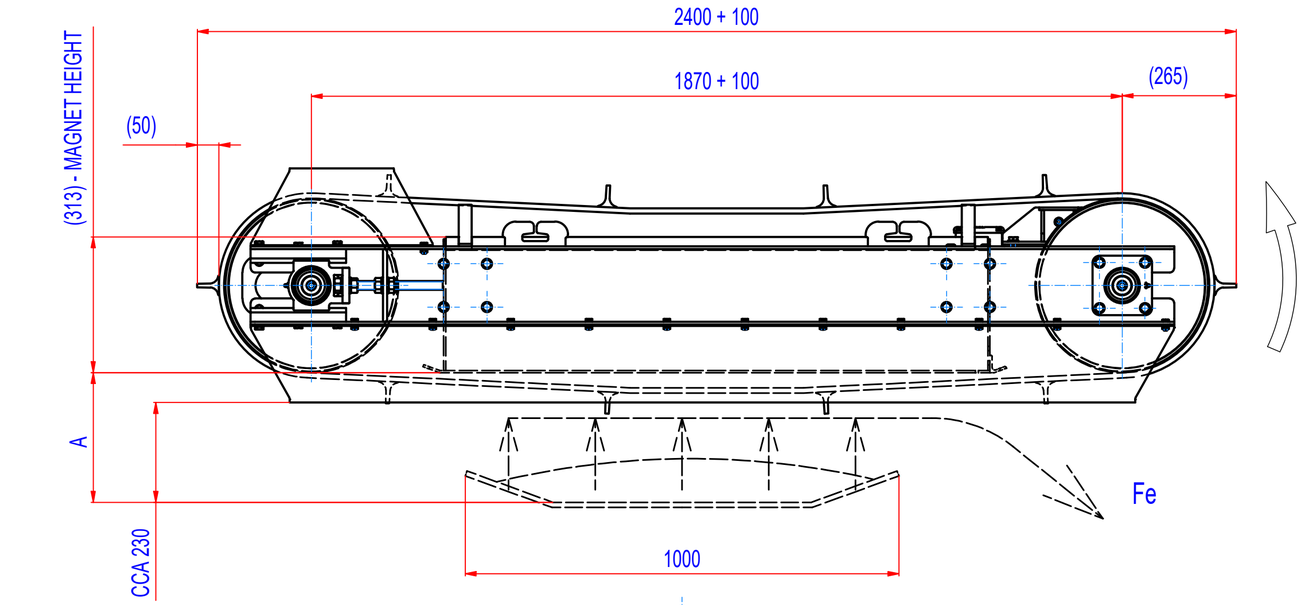

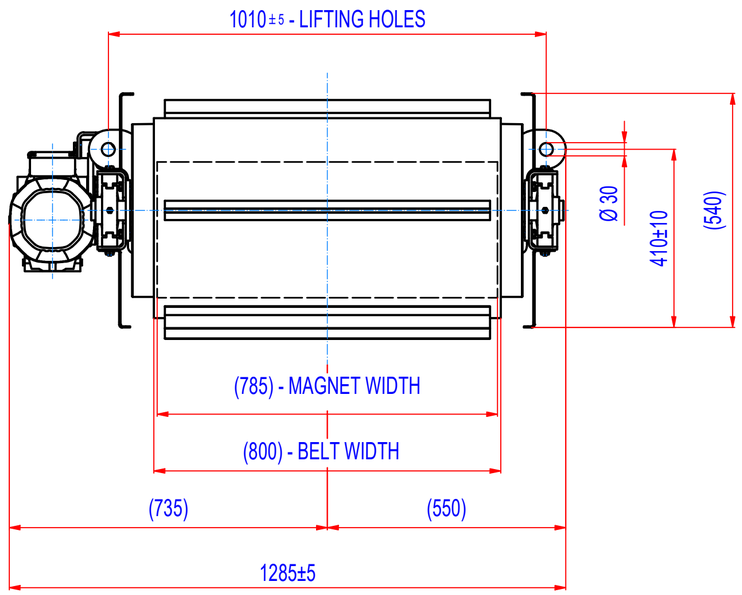

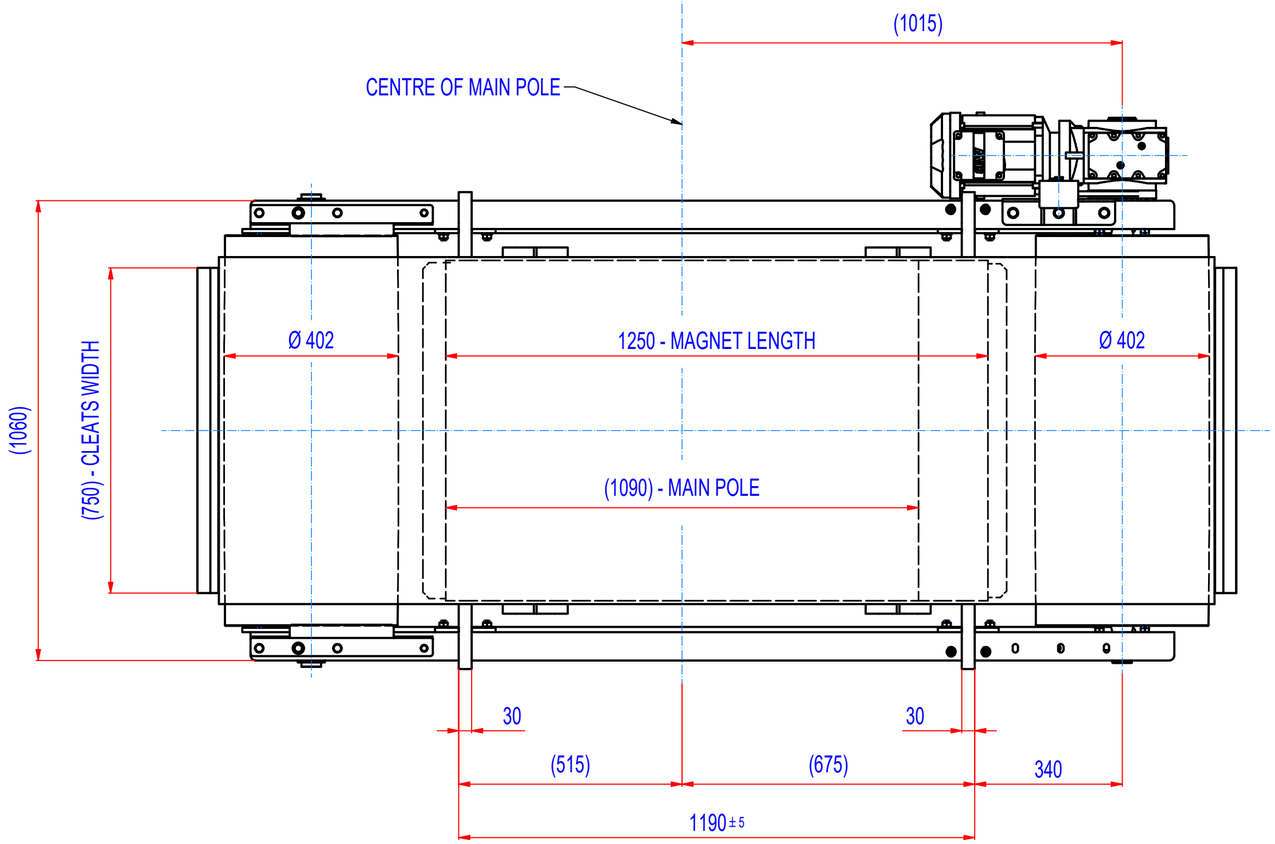

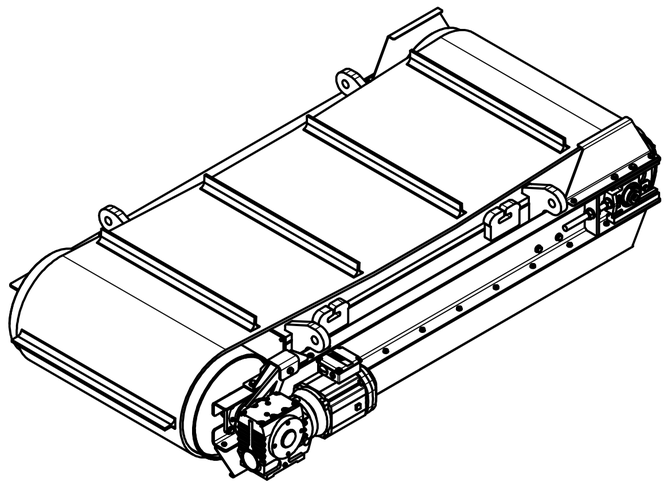

A = 380 mm - max. catch distance for rod Ø15, L=75 mm (VDE)
A = 300 mm - 400 Gs

- GEARED BOX SEW SA67/TDRN100LS4, i=20,37 (71RPM), MOTOR 230/400V, 2,2kW, 50Hz, IP55
- DRUM SPEED 71/min
- BELT SPEED 1,5m/s
- BELT EP500/4 5+2, LENGTH 5050, WIDTH 800, 10 CLEATS T50/10, WIDTH 750

Sheet: A2	Extra info:		General tolerance: ISO 2768 - cL
Drawn: EN	Weight (kg): 1726,2 kg		Drawn according: ISO268; ISO1101; ISO2553
Date: 11.5.2017	GOUDSMIT MAGNETICS		Status:
Predecessor: SEPB100034			Customer reference number:
Quick search: XSPB 4			Product key: ROP-F4-C-100-W-G-L-B-B-B-NA
Description: Overband separator, Ferrite, Size 4, W1000, Cross			Part number: ROFC100340 Rev: A

© All rights reserved. Reproduction is not permitted without written permission of GOUDSMIT Magnetic Systems BV