REV	DATE	BY	DESCRIPTION
-	22.09.2018	LF	OLD REFERENCE ROFI100330_B

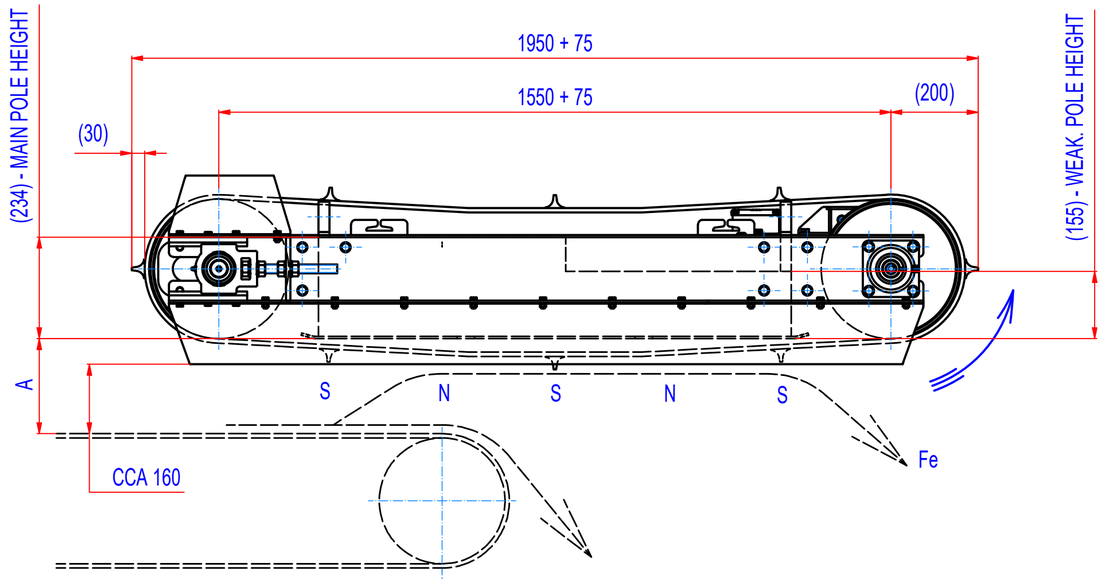

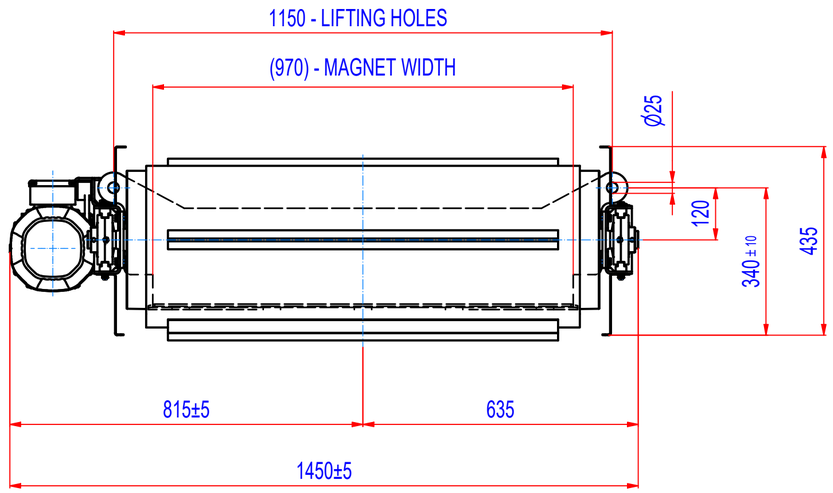

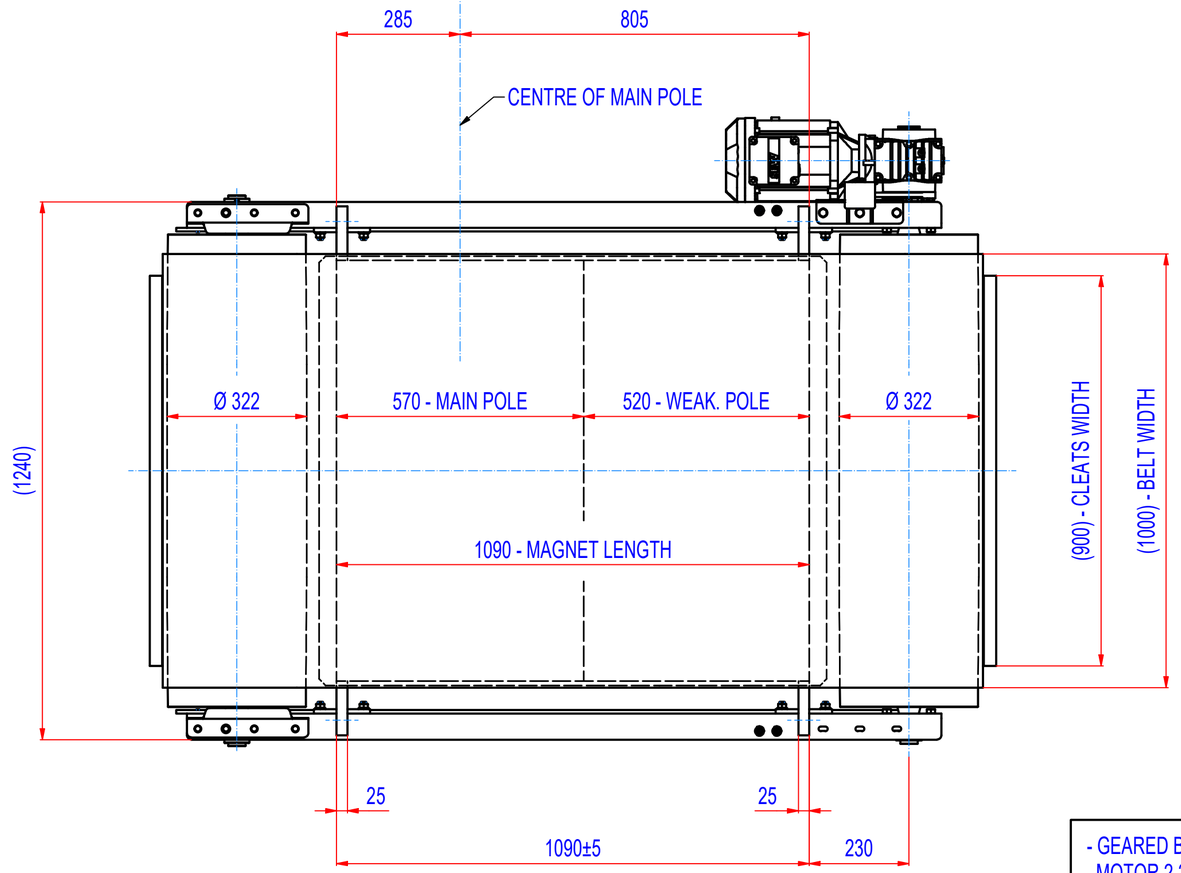

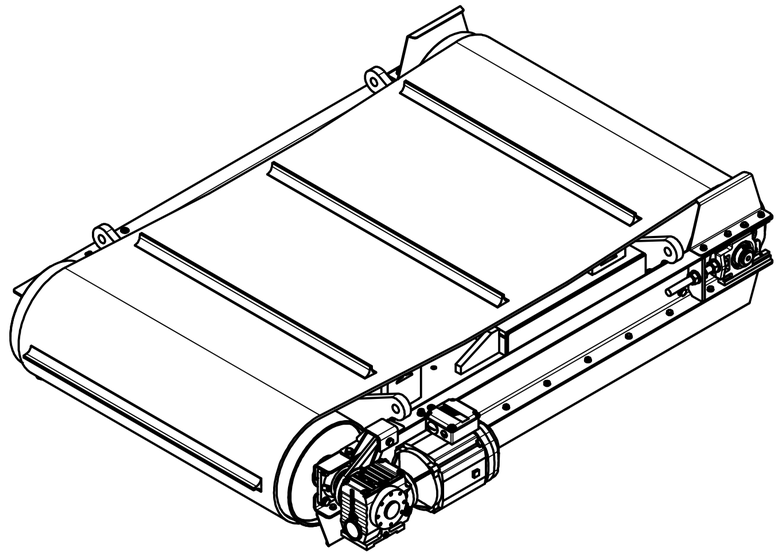

A = 310 mm - max. catch distance for rod Ø15, L=75 mm (VDE)
A = 220 mm - 400 Gs

- GEARED BOX SEW SA57/TDRN100LS4, i=14,24 (102RPM), MOTOR 2,2kW, 230/400V, 50Hz, IP55
- DRUM SPEED 102/min
- BELT SPEED 1,7 m/s
- BELT EP400/3 4+2, WIDTH 1000, LENGTH 4170, 8 CLEATS T30/10, WIDTH 900

Sheet: A2	Extra info:		General tolerance: ISO 2768 - cL
Drawn: LF	Weight (kg): 1340.3		Drawn according: ISO268; ISO1101; ISO2553
Date: 22.9.2018	GOUDSMIT MAGNETICS		Status:
Predecessor:			Customer reference number:
Quick search: XSPB 3	© All rights reserved. Reproduction is not permitted without written permission of GOUDSMIT Magnetic Systems BV		Product key: ROP-F3-I-100-W-G-L-B-B-B-NA
Description: Overband separator, Ferrite, Size 3, W1000, Inline			Part number: ROFI100330 Rev: -