REV	BY	DATE	DESCRIPTION
-	LF	14.06.2017	ORIGINAL DRAWING
A	PH	09.12.2022	Change drive to IE3 (was IE1)

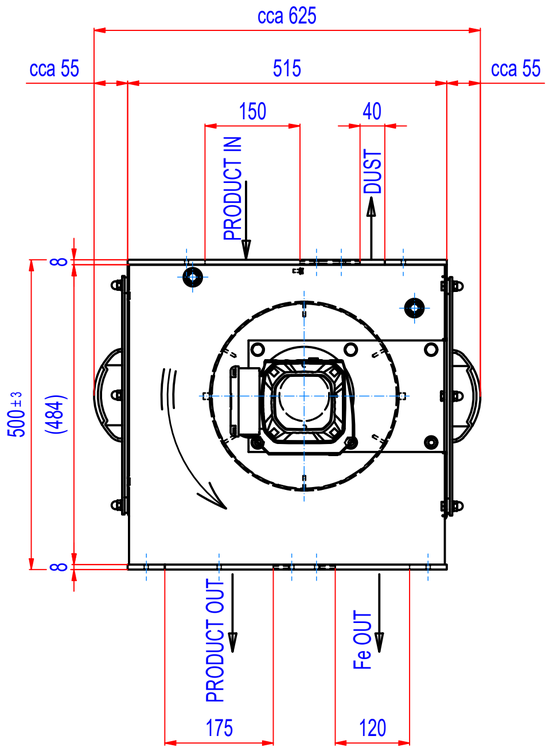

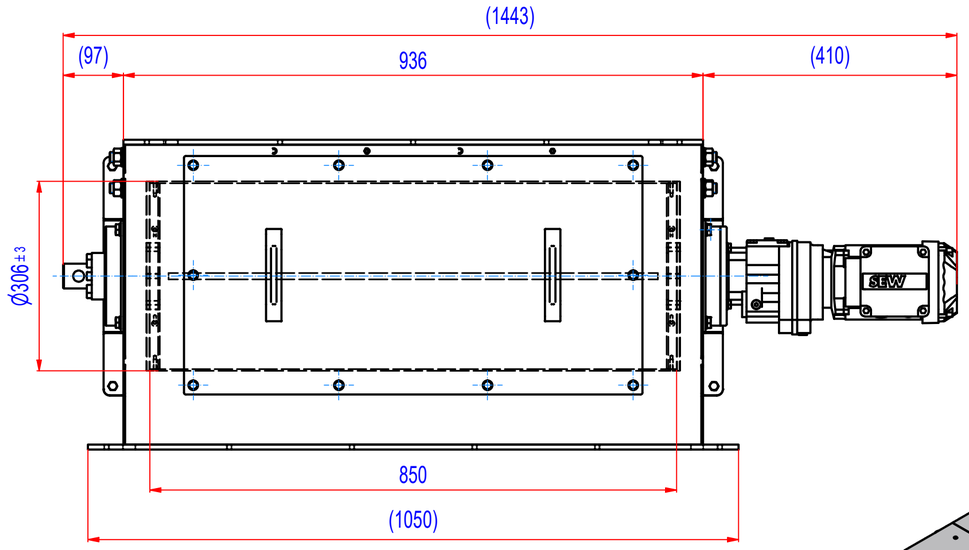

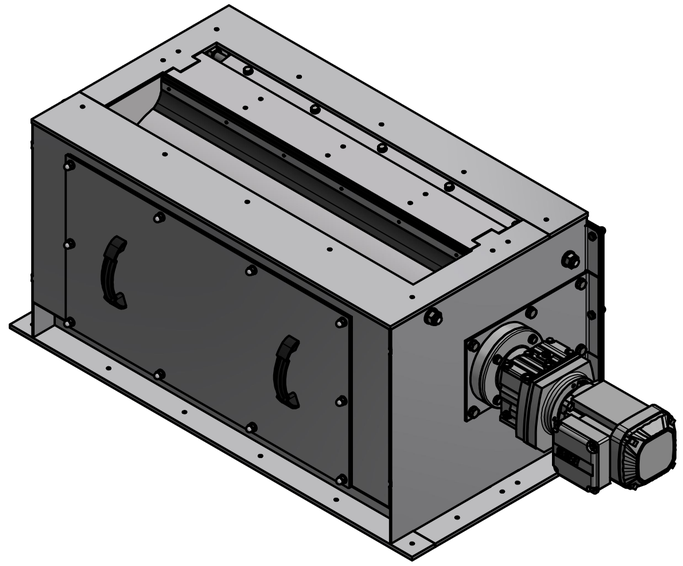

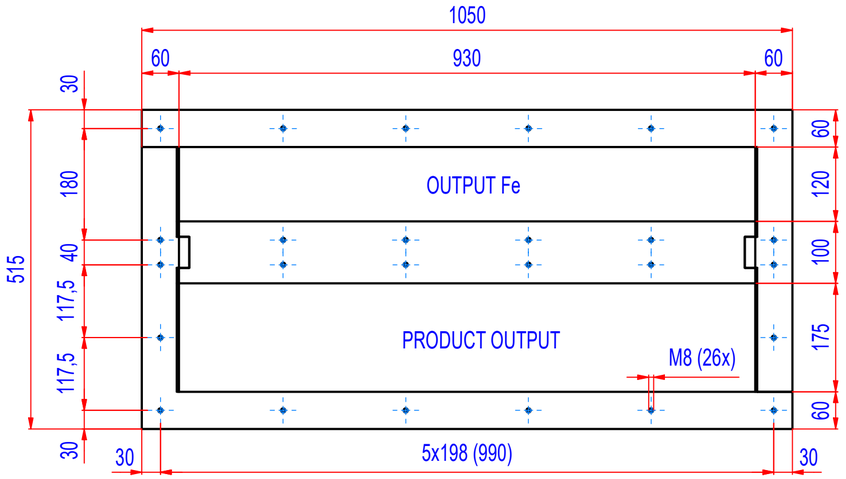

TOP FLANGE

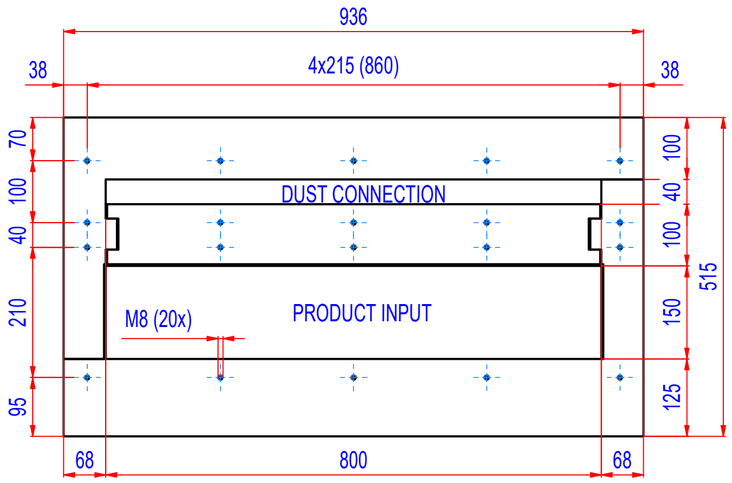

BOTTOM FLANGE

- GEARED BOX SEW RF37DRN71M4, i=55,76 (25RPM)

POZ./POS.	Č. SOUČÁSTI/ PART NUMBER	POPIS / DESCRIPTION	HMOT./ WEIGHT
1	A158_000000	DRUM MAGNET SRTM080034	263,7

Date:	Order ref.:	Responsible person:
Sheet: A2	Extra info:	General tolerance: ISO 2768 - cL
Drawn: LF / Weight (kg): 263.7		Drawn according: ISO268; ISO1101; ISO2553
Date: 09.12.2022	GOUDSMIT MAGNETICS	Status:
Predecessor:		Customer reference number:
Quick search: XSTK	© All rights reserved. Reproduction is not permitted without written permission of GOUDSMIT Magnetic Systems BV	Product key: SETK-083-SD-B-30S2-NA-FZB-B-B
Description: Drum separator in housing, Comb, D306-800		Part number: SRTK080034 Rev: A