REV	BY	DATE	DESCRIPTION
-	LF	14.06.2017	ORIGINAL DRAWING
	PH	05.11.2020	Add note + food slats
A	PH	09.12.2022	Change drive to IE3 (was IE1)

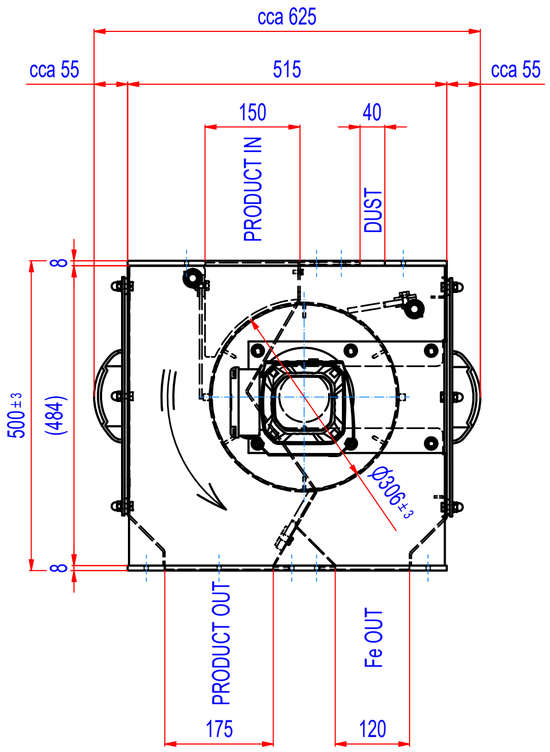

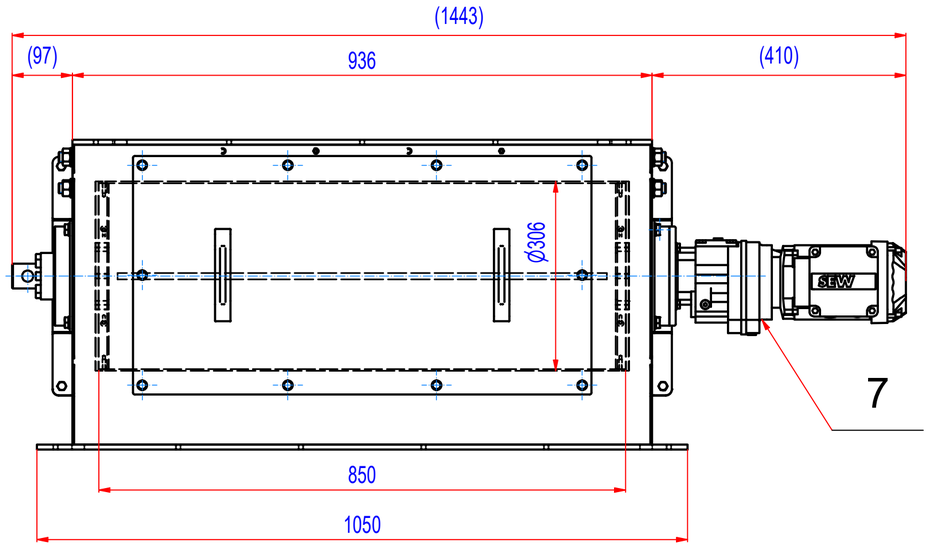

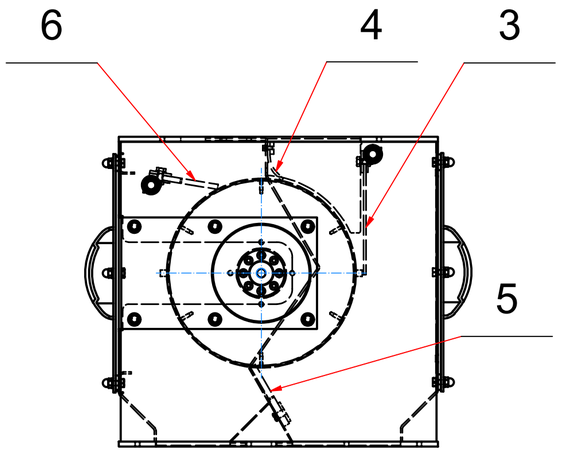

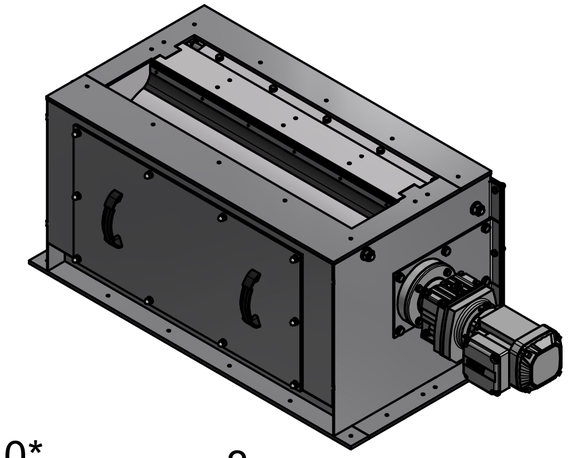

* It is recommended to replace the flanges (POS.10)
and the drum shell (POS.1) at the same time.
The need to fit these parts.
Pos. 11 to 14 are intended for the food industry

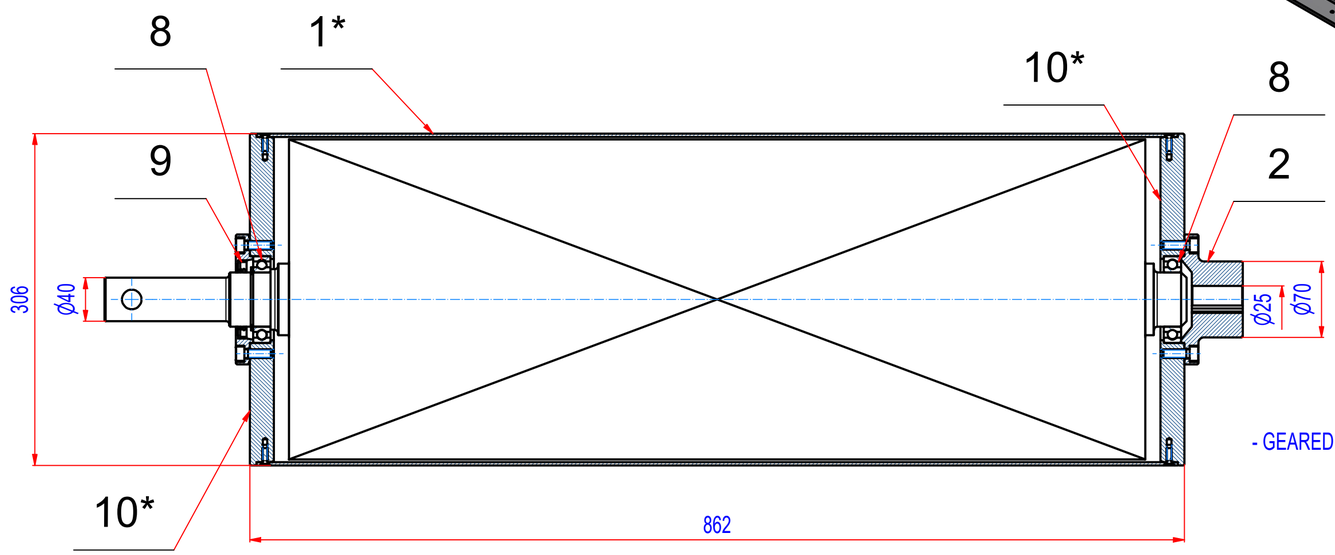

- GEARED BOX SEW RF37DRN71M4, i=55,76 (25RPM)

POZ.	Č. SOUČÁSTI	POPIS	MATERIÁL	HMOT.	MN.
14	A158_060009	TOP CLEANING STRIP	FOOD PUR	0,7	1
13	A158_000009	BOTTOM CLEANING STRIP	FOOD PUR	0,9	1
12	A158_000008	IMPUT PUR SLAT	FOOD PUR	0,2	1
11	A158_040009	FRONT PUR SLAT	FOOD PUR	0,3	1
10*	D02_020001	FLANGE	EN AW-6082 T6	4	2
9	74_1050082	SEALING RING NBR G 50x72x8	RUBBER		1
8	15_0406010	BEARING 6010-2RSI		0,2	2
7	MS03702519	Drive SEW RF37DRN71M4, 0,37kW, i=55,76 (25RPM)		19	1
6	A158_060001	TOP CLEANING STRIP	PUR	0,7	1
5	A158_000002	BOTTOM CLEANING STRIP	PUR	0,9	1
4	A158_000001	IMPUT PUR SLAT	PUR	0,2	1
3	A158_040001	FRONT PUR SLAT	PUR	0,3	1
2	819_000003	Driving shaft SRTM040034w	S355	2	1
1*	D02_020200_B	Shell SRTK080034	AISI 304	21	1

Sheet: A2	Extra info:	General tolerance: ISO 2768 - cL	
Drawn: LF	Weight (kg): 263,7	Drawn according: ISO268; ISO1101; ISO2553	
Date: 09.12.2022	GOUDSMIT MAGNETICS	Status:	
Predecessor:		Customer reference number:	
Quick search: XSTK	© All rights reserved. Reproduction is not permitted without written permission of GOUDSMIT Magnetic Systems BV	Product key: SETK-083-SD-B-30S2-NA-FZB-B-B	
Description: SPARE PARTS for drum separator in housing, Comb, D306-800		Part number: SRTK080034	Rev: A